Primjer 5.4) ako je kond na putu signala prema izlaznom naponu on je vezni kondenzator.

$A_{Ig} = \frac{i_{iz}}{i_g} = ?$

$\beta \approx h_{fe} = 100$

$U_\gamma = 0{,}7V$

$U_T = 25mV$

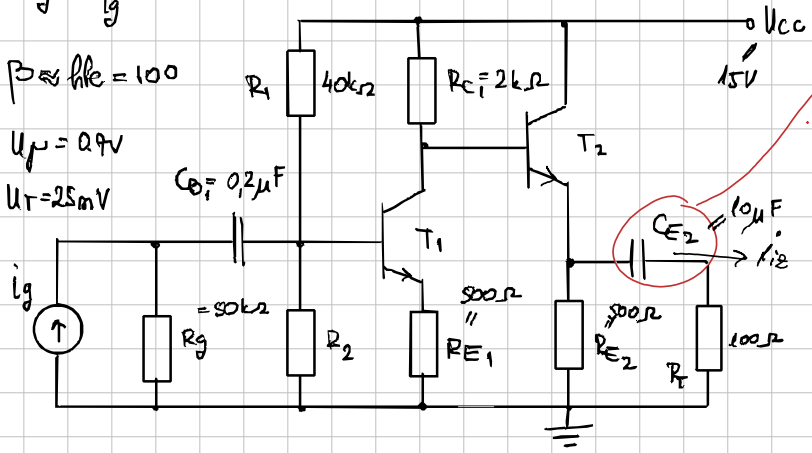

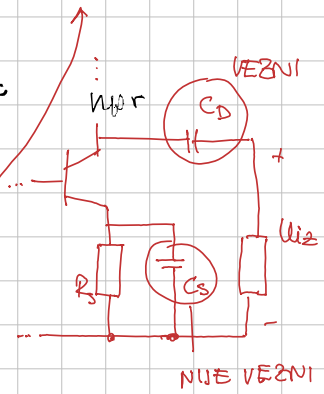

Statika:

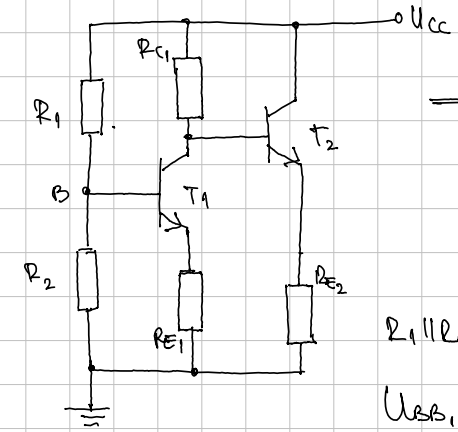

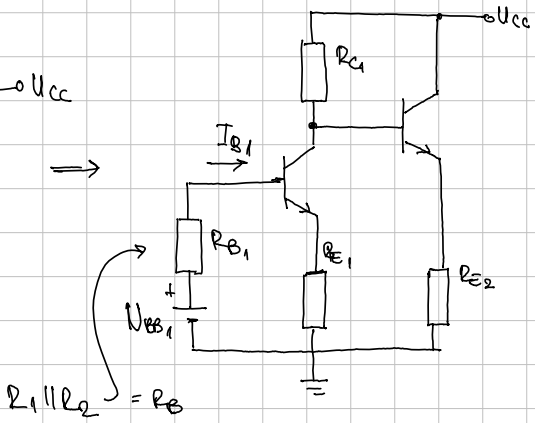

$R_1 \| R_2 = R_B$

$U_{BB_1} = \frac{R_2}{R_1 + R_2} \cdot U_{cc}$

bla bla bla ovaj opet ne radi statiku??

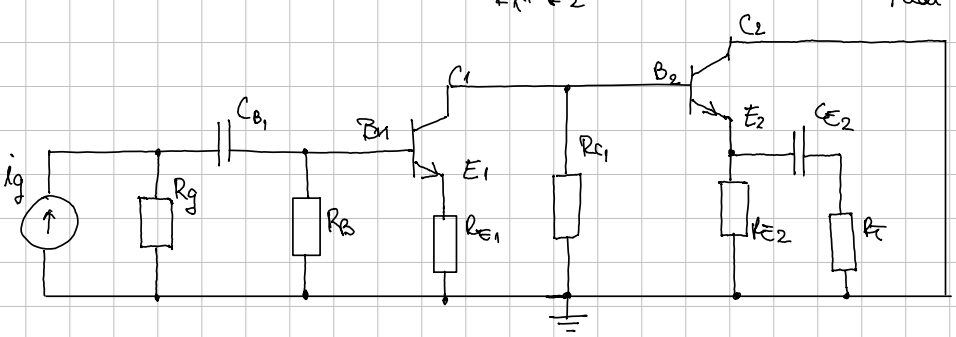

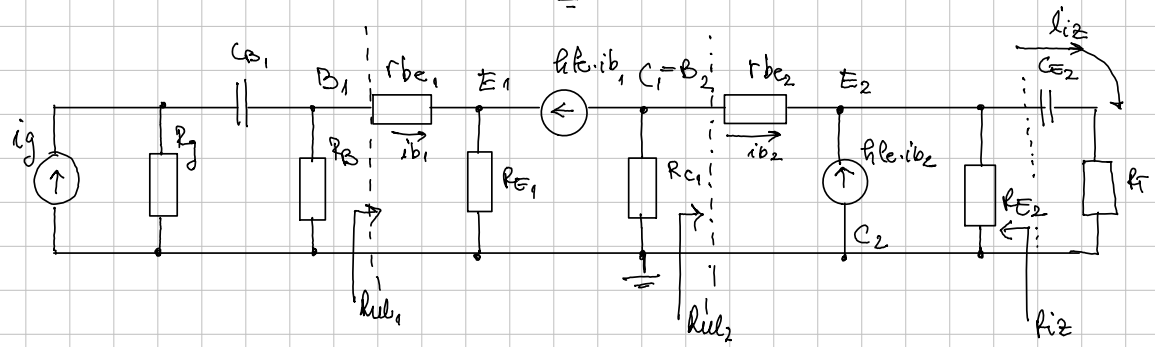

$A_{Ig}(j\omega) = \frac{i_{iz}}{i_g}$

i_{iz} = preko i_{b2}

$i_{b2} \rightarrow$ preko i_{b1}

$\frac{i_{iz}}{i_g} = \frac{i_{iz}}{i_{b2}} \cdot \frac{i_{b2}}{i_{b1}} \cdot \frac{i_{b1}}{i_g}$

→ Kada imamo vezne kondenzatore, onda znamo oblik karakt koje mašu nači od kondenzatora

$$A_I(j\omega) = A_{I0} \underbrace{\frac{j\frac{\omega}{\omega_1}}{1 + j\frac{\omega}{\omega_1}}}_{C_{B_1}} \cdot \underbrace{\frac{j\frac{\omega}{\omega_2}}{1 + j\frac{\omega}{\omega_2}}}_{C_E}$$

Ide li ta A_{In} ili A_{Io}?

⟹ A_{Io}! jer A_{In} ide samo kada analiziramo utjecaj C_S i kond C_E u klasičnom spoju kada su u paraleli

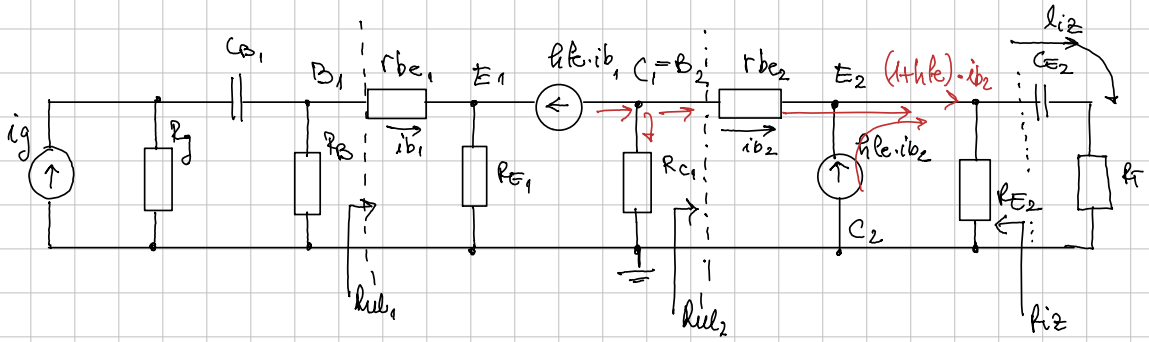

$$A_{I_g}(j\omega) = \frac{i_{iz}}{i_g}$$

i_{iz} = preko i_{b_2}

$i_{b_2} \rightarrow$ preko i_{b_1}

$$\frac{i_{iz}}{i_g} = \frac{i_{iz}}{i_{b_2}} \cdot \frac{i_{b_2}}{i_{b_1}} \cdot \frac{i_{b_1}}{i_g}$$

→ kada imamo vezne kondenzatore, onda znamo oblik karakt koje unaša nagib od kondenzatora

$$A_I(j\omega) = A_{IO} \underbrace{\frac{j\frac{\omega}{\omega_1}}{1+j\frac{\omega}{\omega_1}}}_{C_{B_1}} \cdot \underbrace{\frac{j\frac{\omega}{\omega_2}}{1+j\frac{\omega}{\omega_2}}}_{C_E}$$

Ide li ne A_{In} ili A_{Io}?

⟹ A_{IO}! jer A_{In} ide samo kada analiziramo utjecaj C_S i kond R_E u klasičnom spoju kada su u paraleli

A_{IO}: ili ih K.S. ili odspajamo ⇒ za A_{IO} treba K.S.! (C_{B_1}, C_{E_2})

$$i_{iz} = (1+h_{fe})\cdot i_{b_2} \cdot \frac{R_{E_2}}{R_{E_2}+R_T}$$

$$i_{b_2} = -h_{fe}\cdot i_{b_1} \cdot \frac{R_{C_1}}{R_{C_1}+R_{ul_2}}$$

$$R_{ul_2} = \frac{u_{z}'}{i_{b_2}} = \frac{r_{be_2}\cdot i_{b_2} + (1+h_{fe})\, i_{b_2}\cdot (R_{E_2} \parallel R_T)}{i_{b_2}}$$

$$R_{ul_2} = r_{be_2} + (1+h_{fe})(R_{E_2} \parallel R_T)$$

$$i_{b_2} = -h_{fe}\cdot i_{b_1} \cdot \frac{R_{C_1}}{R_{C_1} + r_{be_2} + (1+h_{fe})\cdot(R_{E_2} \parallel R_T)}$$

$i_{b_1} =$ * C_{B_1} = K.S → $R_G \parallel R_B$ je jedna grana ⇒ $i_{b_1} = i_g \cdot \dfrac{R_G \parallel R_B}{R_G \parallel R_B + R_{ul_1}}$

$R_{ul_1} = \dots = $ (PRESLIKAVANJE) $= r_{be_1} + (1+h_{fe})\cdot R_{E_1}$

$$\Rightarrow i_{b_1} = i_g \cdot \frac{R_G \parallel R_B}{R_G \parallel R_B + r_{be_1} + (1+h_{fe})R_{E_1}}$$

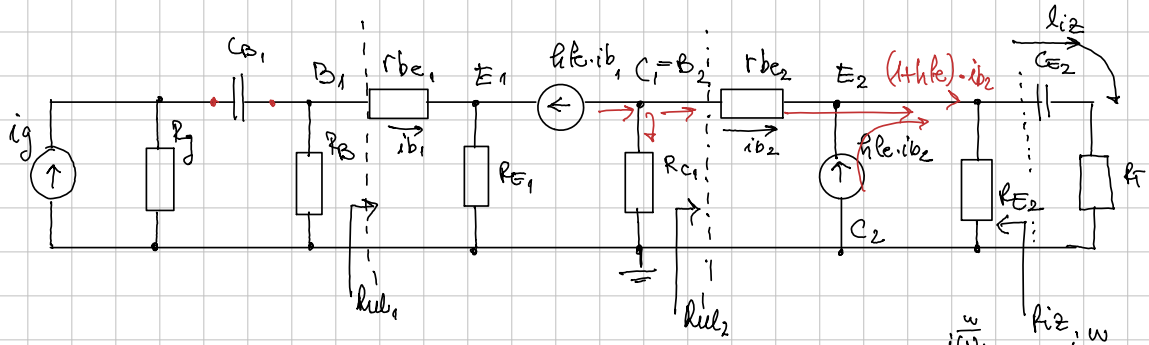

$$A_{I0} = \frac{i_{iz}}{i_g} = \frac{i_{iz}}{i_{b_2}} \cdot \frac{i_{b_2}}{i_{b_1}} \cdot \frac{i_{b_1}}{i_g}$$

$$A_I(j\omega) = A_{I0} \cdot \frac{j\frac{\omega}{\omega_1}}{1+j\frac{\omega}{\omega_1}} \cdot \frac{j\frac{\omega}{\omega_2}}{1+j\frac{\omega}{\omega_2}}$$

$$A_{I0} = (1+h_{fe}) \cdot \frac{R_{E_2}}{R_{E_2}+R_T} \cdot (-h_{fe}) \cdot \frac{R_{C_1}}{R_{C_1}+r_{be_2}+(1+h_{fe})(R_{E_2}\parallel R_T)} \cdot \frac{R_G \parallel R_B}{R_G \parallel R_B + r_{be_1} + (1+h_{fe})\cdot R_{E_1}}$$

ω_1 i ω_2 =?

$\boxed{C_{B_1} \rightarrow \omega_1}$

$$\omega_1 = \frac{1}{\tau_1} = \frac{1}{C_{B_1}\cdot(R_g + R_B \parallel R_{ul_1})}$$

$\boxed{C_{E_2} \rightarrow \omega_2}$

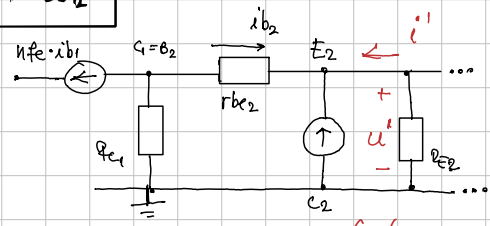

$$\omega_2 = \frac{1}{\tau_2} = \frac{1}{C_{E_2}\cdot\left(R_T + R_{E_2} \parallel \frac{u'}{i'}\right)}$$

$$\frac{u'}{i'} = \frac{\cancel{i_{b_2}}(R_{C_1}+r_{be_2})}{\cancel{-}(1+h_{fe})\cdot \cancel{i_{b_2}}}$$

$$\Rightarrow \omega_2 = \frac{1}{C_{E_2}\cdot\left(R_T + R_{E_2} \parallel \frac{R_{C_1}+r_{be_2}}{1+h_{fe}}\right)}$$

→ kada idemo od srednjih frekvencija, donja granična je ona prva na koju naletimo kada idemo prema niskim frekv

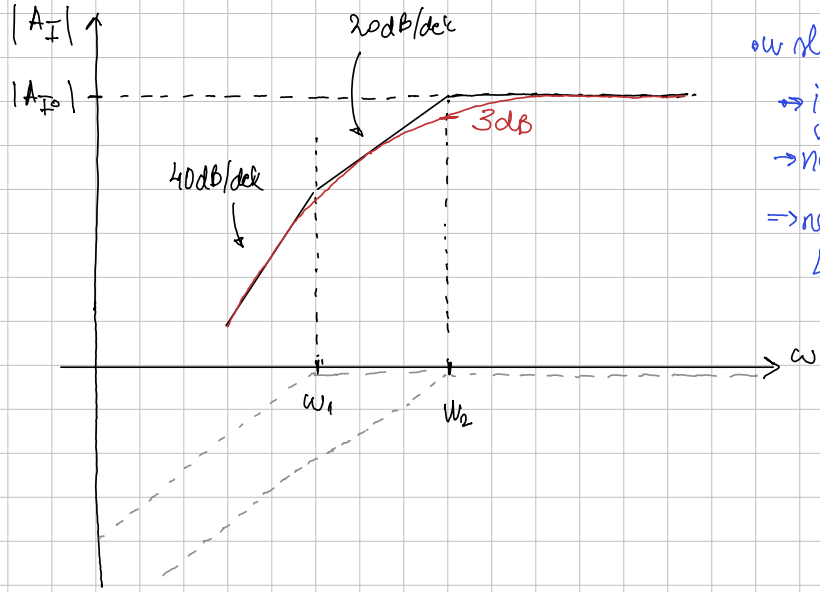

• u slučaju računanja R_{iz}
→ i_g odspajamo
→ naponski k.s
⇒ nema pobude i_{b_1}
↳ $h_{fe}\cdot i_b = 0$
(smijemo odspojiti)